Relationalism and (General) Relativistic Physics

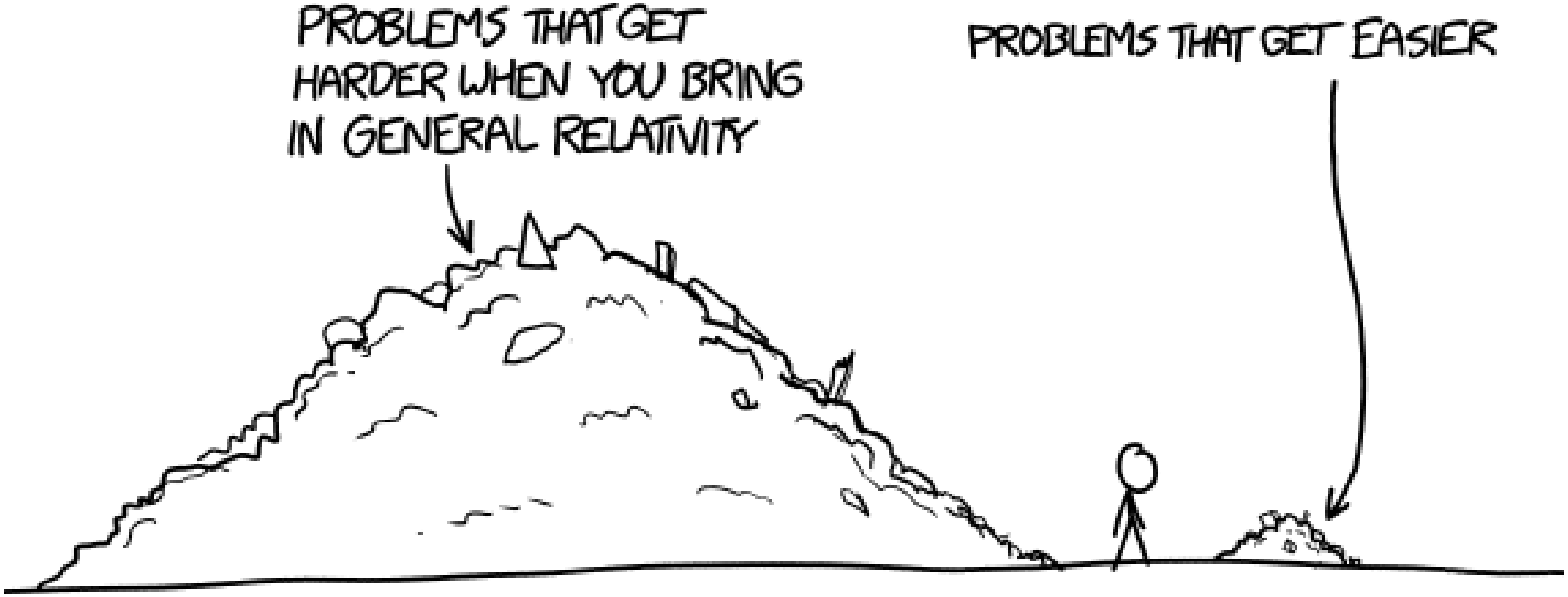

Relationalism and (General) Relativistic Physics

Two distinct issues:

- To what extent is GR a relationalist theory?
- Can we construct a Leibnizian relational theory with a particle ontology, which is as empirically adequate as GR?

General Relativity

Einstein's field equations:

$$\mathbf{G}[\mathbf{g}] = \kappa \mathbf{T}[\mathbf{g}, \Phi].$$

- $\mathbf{G}[\mathbf{g}]$ is the Einstein's tensor. It encodes information about the 4-dimensional spacetime geometry.
- $\mathbf{T}[\mathbf{g}, \Phi]$ is the stress-energy tensor. It encodes information about the distribution of a matter field Φ in spacetime.
- A *model* of GR is a solution of Einstein's field equation.
- It is a triple $< M, \mathbf{g}, \mathbf{T} >$.

General Relativity

Einstein's field equations:

$$\mathbf{G}[\mathbf{g}] = \kappa \mathbf{T}[\mathbf{g}, \Phi].$$

Space acts on matter, telling it how to move. In turn, matter reacts back on space, telling it how to curve.
(C.W. Misner, K.S. Thorne, J.A. Wheeler - Gravitation. Freeman & Co., 1973, p.5)

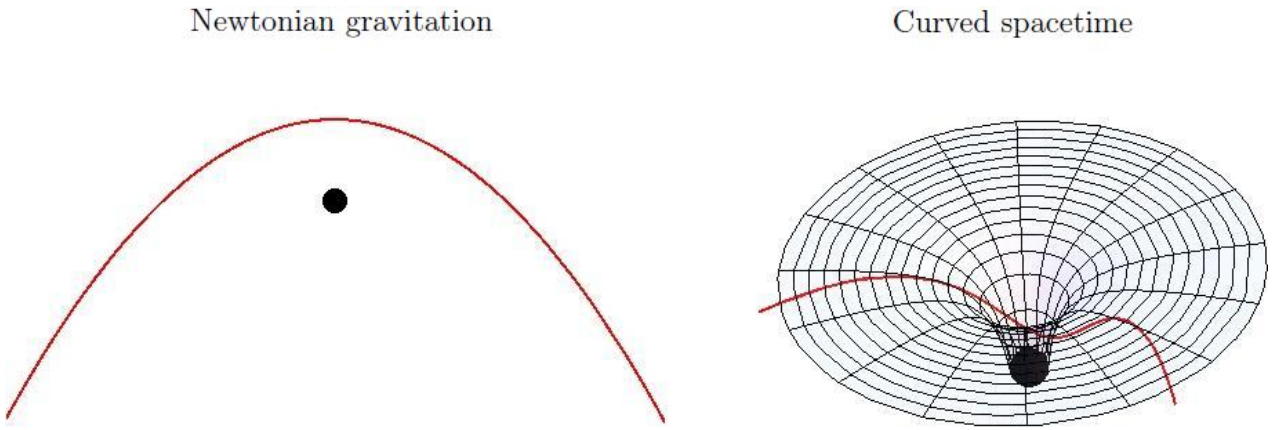

General Relativity

- It is commonly said that GR unifies gravity and physical geometry.
- GR describes gravitational forces as curvature effects of spacetime geometry.
- In this (weak) sense, GR succeeds in "geometrizing away" gravity.
- However, there is no straightforward reduction here: "spacetime" and "gravitational field" are two ways to refer to the same entity.

Two Senses of "Relationalism" in General Relativity

1. Spatiotemporal facts fully reducible to material facts (eliminative relationalism).
2. Spatiotemporal facts fully reducible to facts about spatiotemporal relations instantiated by material relata (non-eliminative relationalism).

Against Relationalism in GR

- GR admits cosmological models of the form $< M, \mathbf{g}, 0 >$, which means that it makes physical sense in GR to think about a universe totally deprived of matter, where still there is spacetime.
- There are several models of the form $< M, \mathbf{g}, 0 >$, each of which is physically distinguishable from the others (e.g. different curvatures), this means that the properties of spacetime are not ontologically parasitic on matter fields.
- Matter fields *require* spacetime in order to be defined. The stress-energy tensor is basically a specification of material properties instantiated *at spacetime points*.

Relationalist's Replies

- Agreed, GR admits empty solutions.
  - But once the theory is properly interpreted, such solutions turn out to be mere *mathematical* possibilities.
- Agreed, the standard characterization of a field involves assigning, for each coordinate system, a set of numbers to each point $p \in M$.
  - However, we should not take this characterization at face value as an actual assignment of properties to spacetime points.

Against Spacetime Points: The Hole Argument

Diffeomorphism

A *diffeomorphism* over a (neighborhood of a) manifold M is a function $f : M \to M$ such that:

- It is bijective (i.e. one-to-one and onto).
- It is differentiable together with its inverse f^{-1}.

Just to have a rough idea, you can visualize a diffeomorphism as a continuous deformation of the manifold.

Gauge theorem for GR (Substantive General Covariance)

If $< M, \mathbf{g}, \mathbf{T} >$ is a model and $f : M \to M$ is a diffeomorphism, then if we "deform" $< M, \mathbf{g}, \mathbf{T} >$ with f, we obtain another model $< M, f^*\mathbf{g}, f^*\mathbf{T} >$ that is *physically indistinguishable* from the starting one.

Against Spacetime Points: The Hole Argument

Let us start with a nice and well-behaved picture compatible with the dynamics of GR:

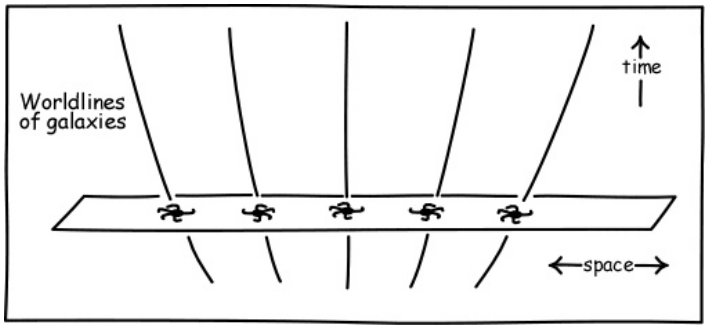

Now let us consider a spacetime point E and "carve a hole" around it where some diffeomorphism acts:

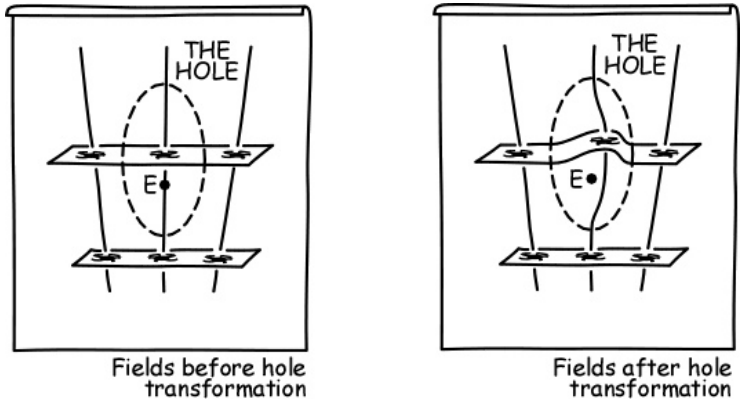

Against Spacetime Points: The Hole Argument

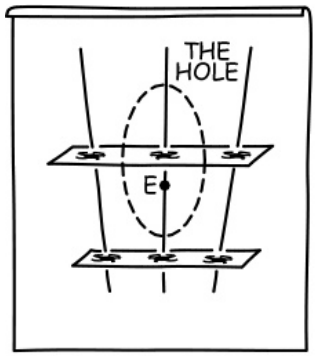

Fields before hole transformation

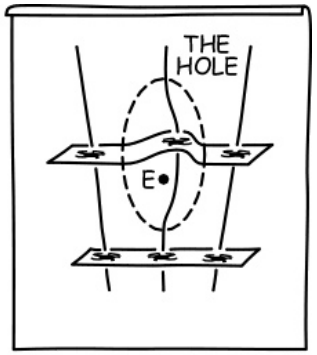

Fields after hole transformation

- Question: Do the above pictures differ in some respect?
- Substantivalist reply: Yes, they differ in the central galaxy's trajectory.
- But the two pictures agree on all physically observable aspects! (So whether the trajectory passes or not through E is not a matter of observable fact).

Against Spacetime Points: The Hole Argument

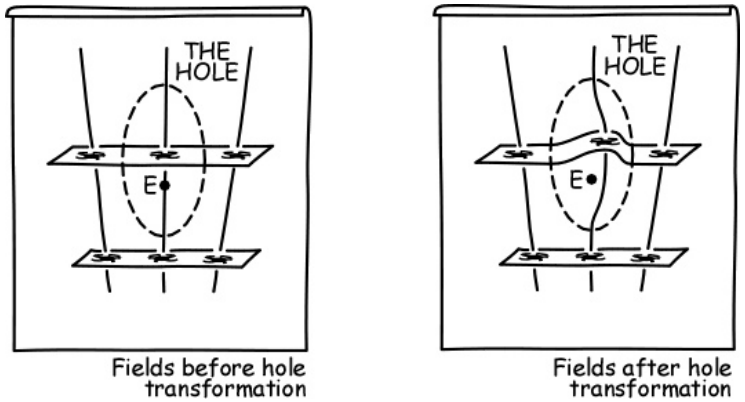

- Hence, the substantivalist is committed to the existence of states of affairs which are ontologically different yet physically indistinguishable.
- This leads to indeterminism: the two pictures fully agree on the initial data but disagree on the subsequent dynamical development.

Against Spacetime Points: The Hole Argument

- The hole argument is directed against the primitive thisness of spacetime points, rather than their existence simpliciter.
- "Sophisticated" substantivalism(s) is immune to this argument.
- However, sophisticated substantivalism and relationalism might look suspiciously similar.

Leibnizian Relationalism in GR

- Can we apply Huggett's strategy to GR?
- Problem 1: Three dimensional perspective.
  - Possible solution: trade refoliation invariance for conformal invariance (shape dynamics).
- Problem 2: We cannot define an inertial reference system as one in which the laws of GR hold.
  - There are no inertial r.s. in GR.
  - The laws of GR should hold in all r.s. (general covariance).
  - Possible solution: connection coefficients in freely falling r.s.
- Problem 3: How to account for purely gravitational effects (e.g. gravitational waves, singularities)?
  - Possible solution: dismiss empty solutions as "too poor" to admit a best descriptive system.

Matching GR's phenomenology with particles and (spatial) relations?

- GR is a *field theory*. We do have *test* particles, but the notion of particle as an actual spatially unextended object is problematic (e.g. Schwarzschild radius).
- By way of consequence, there is no much room for a particle ontology within GR.
- However, that does not mean that we cannot construct a brand new theory, which exploits a particle ontology and a Leibnizian ideology.

Matching GR's phenomenology with particles and (spatial) relations?

- Problem 1: Three dimensional perspective.
  - Possible solution 1: shape dynamics, again.
  - Possible solution 2: multi-temporal ordering among configurations. (Isn't it four-dimensionalism in disguise?)
- Problems 2,3,4...: Including matter fields *and their non-linear coupling* with the gravitational field in the dynamical structure of the theory.